A PROPOSED MODEL ON VEHICLE SPEED DETECTION AND NUMBER PLATE RECOGNITION SYSTEM

Alpna Saxena, Shuchita Saxena, Akash Saxena, Apoorv Saxena, Dev Khanna
Department of Electronics and Communication Engineering
Moradabad Institute of Technology, Moradabad-244001
Uttar Pradesh, India

ABSTRACT
Nowadays, due to fast and rash driving, occurrence of accidents are frequent leading to loss of innocent and valuable lives. Gone are the days when people were afraid of the road signs where it is clearly mention that a driver must not exceed the speed of the vehicle beyond the speed limit. This small mistake can even cause them their lives. So, in order to avoid such kind of accidents and to alert the drivers about the speed limits, a system is developed using certain existing technologies like Embedded Systems, MATLAB, GSM technology. The system comprises of four major steps: vehicle speed detection using an appropriate speed sensor, making real time video of moving vehicles, detection of numbers on the number plate and then sending a message to the driver of the vehicle regarding the increased speed limits and the fine or challan that has to be paid by him for that.

KEYWORDS: *Embedded Systems, GSM Module, MATLAB and Speed detection.*

1. Introduction

Nowadays, problem of speeding of vehicles is a major issue. It is difficult for traffic policemen to continuously monitor the vehicles crossing the speed limit. It also leads to serious road accidents.
A system for automatic recognition of speed would probably be important for traffic safety in the future. Such systems could assist drivers on speed they did not notice while driving. Studies in this paper, could inform drivers about their present driving speed as well as giving information, if the vehicle is been driven faster than the speed limit. In the future, all the vehicles would probably have to be controlled by automatic speed detection and accordingly penalties will be charged by sending them a message or an email or by making a phone call.
Vehicle speed limit detection system comprises of an automatic system which detects the speed of a moving vehicle using appropriate sensors and triggers the camera to record when the speed exceed the specified limit & then by making the video of the moving vehicle the number is retrieved from the number plate using MATLAB. Further, the number is searched in the database and a message or call is made to the person whose vehicle was detected regarding the challan.

2. Literature Survey

MayuriKonde et. al.[2]: This paper was based upon the real time motion detection of the moving as well as non-moving objects with the help of dynamic cameras. In this paper a smart surveillance system is implemented which will be helpful in detecting the moving as well as stationary objects with the help of camera. Motion detection algorithm and various images processing technique has been utilized for the purpose of detection of objects in video stream. A video stream is given as an input to the system, then the system will perform various image processing operations to detect the object.
In this method, using moving camera the video is captured. The reference frame is taken first when the camera starts then current frame and the previous frame both are compared. Utilizing the frame

differencing technique, the change detection from the captured images can be performed. The video data from these cameras should be transmitted in real time to the control room or end-users for further analyzing surveillance-related information. However, transmitting real time video over a network is a challenge task because video data usually contain large amount of information quantity and the transmission channel might have limited bandwidth.

A key solution to video transmission is to reduce the quantity and complexity of original videos but simultaneously preserve the most important message within the original image content. This is done by image compression techniques.

SairajBhatkar et. al.[[1] :

This paper introduced a system that uses RADAR and LIDAR technology and SDCS(Speed Detection Camera System). These technologies are used to detect the speed of the moving vehicle.The reflected signal is detected by the receiver of RADAR. The radar then calculates the frequency difference between the original and reflected signals, and converts it into the speed of the moving vehicle, and then LIDAR calculates the distance between the gun and the vehicle. By doing some calculations and comparing the distance which vehicle travelled between measurements, LIDAR determines the speed of vehicles.

SDCS can be used as an alternate of the RADAR technology and it also utilizes MATLAB for the purpose of image processing.

Limitation of radar

Stationary traffic enforcement radar must occupy a location above or to the side of the road, so the user must understand trigonometry to guess vehicle speed as the direction changes while a single vehicle moves within the field of view. Vehicle speed and radar measurement are rarely the same for this reason. Radar speed guns do not work reliably in traffic, and significant vehicle separation is essential for proper operation when used for speed monitoring.

Limitation of Lidar

The LIDAR is generally used as a stationary device and fired in clear air. There is a low probability that a police officer will try to operate it in heavy rain or through a windshield from inside his vehicle. Unlike police radar, it is able to pick a single vehicle out of a group.

AkshadaDeshmukh et. al.[[3]: In this paper camera has been used as a sensor for the purpose of motion detection by combining it with some software. The system is used as an intelligent monitoring sensor for the purpose of object detection.An intelligent monitoring sensor is an application which is developed from the security point of view. The system monitors the area in which it is being implemented. An Intelligent Monitoring Sensor is applicable in the area where no one is permissible to enter, also where if someone wants to detect if any motion has been done. For this a digital camera is used. By combining the software and camera this system is used as an Intelligent Monitoring Sensor. The Camera is used to catch the live images of the area in which it is being implemented, if any object is moving. The captured images are stored in a particular folder. The stored images will be then useful to work on. As the software detects the motion, it sends the signal from a transmitter, which is connected to the PC. The transmitter will send the wireless signal to the receiver out somewhere else, in the form of radio frequency. In this way the system will provide the security against any misdeed.

ManishaRathore et. al.[[4]: This paper was based on tracking of the number plate from vehicle using MATLAB. Here in this paper, image of the vehicle is captured using a digital camera and then the alphanumeric characters from the captured image is extracted and recognized. Extracted image can be seen in a text file for the purpose. The system is helpful in finding out the lost or stolen vehicles and in parking area for the management purpose of the vehicles and in identification of the vehicles in the traffic. Step by step process for preprocessing of image is as follows:

- Image acquisition
- Convert into gray image
- Dilation of image
- Horizontal and vertical edge processing
- Passing histograms through low pass filter
- Segmentation of region of interest
- Extraction of region of interest

- Convert into binary image
- Segmentation of alphanumeric characters
- Recognition of individual characters
- Storing in file

3. Proposed System

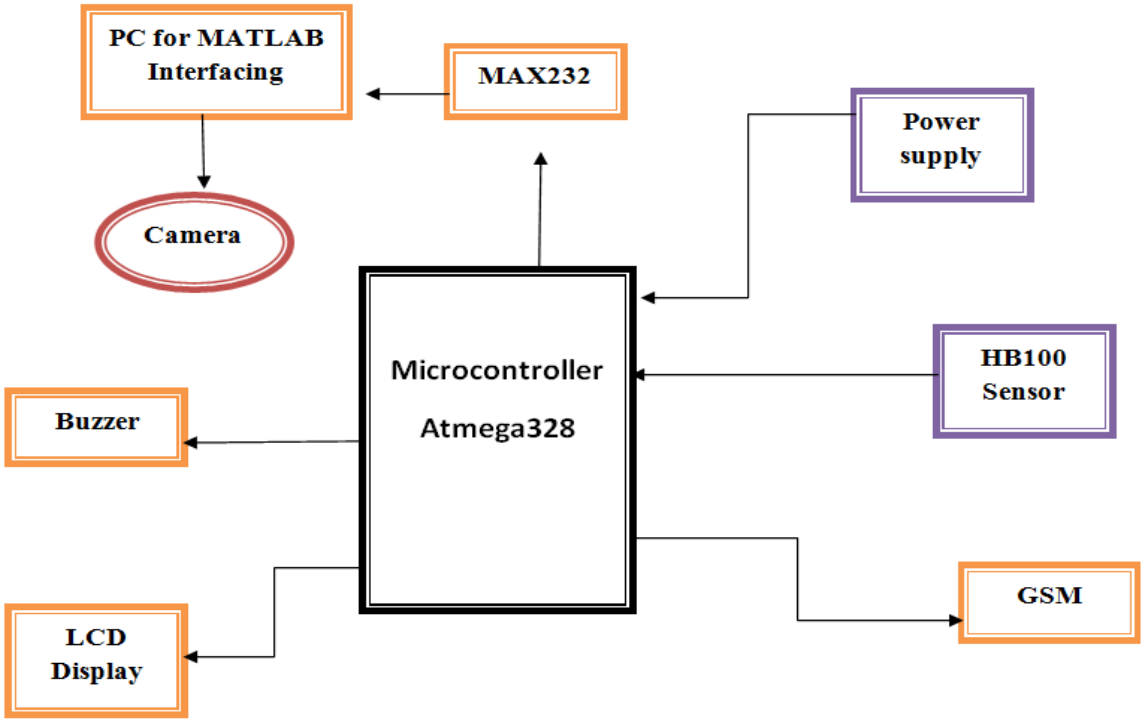

Fig.3.1: Block diagram of proposed system

The ATmega328 is a single-chip microcontroller created by Atmel. It is implemented on Arduino. The Atmel 8-bit AVR RISC-based microcontroller combines 32 kB ISP flash memory with read-while-write capabilities, 1 kB EEPROM, 2 kB SRAM, 23 general purpose I/O lines, 32 general purpose working registers, three flexible timer/counters with compare modes, internal and external interrupts, serial programmable USART. Here microcontroller is receiving an input signal from HB100 sensor and sending it to MATLAB for image processing, and then MATLAB is sending a signal to GSM through microcontroller.

The HB 100 Sensor is used for the purpose of real motion detection. HB100 miniature microwave motion sensor is an X-band, Bi-static Doppler transceiver module. This module is ideal for alarm, motion detection, vehicle speed measurement, automatic lighting, and door projects. It has a long detection range, and supply voltage of about 4.75V and 5.25V and it works in X band frequency of 10.525 GHz.

The sensor utilizes Doppler effect. Doppler Effect is a shift in frequency perceived by a receiver from a signal source due to relative movement of the sender and/or receiver. In a Doppler radar system, a known frequency signal is transmitted from an antenna which is pointed at a reference object. A separate antenna is used to receive the signal that is reflected back from the reference to measure the Doppler shift of the signal. The received signal is then mixed with this set signal, which produces an output that is a sinusoid containing the frequency difference between the sender and receiver signals. Usually, these values need to be processed in a tangible way and is usually done with the help of a microcontroller.

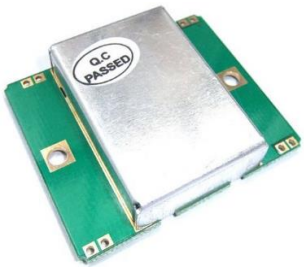

Fig.3.2: HB 100 Sensor

GSM modules are designed for communication of a computer with the GSM and network. It requires a SIM card just like mobile phones to activate communication with the network. Also they have IMEI number similar to mobile phones for their identification.GSM uses a variation of Time Division Multiple Access (TDMA). It works in the frequency band of either the 900 MHz or 1,800 MHz. It supports voice calls and data transfer speeds of up to 9.6 kbit/s, together with the transmission of SMS. Here in this paper GSM module has been used when the driver exceeds speed limits, the vehicle and the speed details are sent to the traffic police system using GSM module.

The system is powered by a battery source of 220V A.C. that is given to the input of transformer to get a proper output voltage at the output of 9 V or to step down the voltage from 220V to 9V, voltage regulator is used to convert voltage from 9 V to 5 V which is required for (Atmega 328) microcontroller, HB 100 sensor and camera. One of the most important feature to the system is the camera that will provide a clear evidence of exceeding speed limits on the roads by the vehicles. Once it receives a signal from HB 100 sensor to make the video of the moving vehicle, image processing of the number plate can be done easily and also video footage can be stored in the SD card.

4. Expected Result

This project as presented in the paper is expected to measure the speeds that fall in a specific range. Not all speeding cars can be detected due to the limitations of the sensor, yet the range upto which the sensor can measure is large and will definitely overcome human effort. The camera is expected to produce a clear footage depending on the resolution but the main task is to retrieve the number from the number plate of the vehicle from the footage. MATLAB can detect the numbers and alphabets with some algorithms. If a number is written clearly, the number will be detected easily without the chances of error. However, the error will arise if the number is written in some other style or it is erased from some portions, there are chances that MATLAB detects a wrong number or alphabet.

5. Conclusion

This paper presents a cost effective, accurate, flexible system which will be helpful in preventing over speeding and rash driving of the vehicles, based on the literature survey and seeing different traffic management systems with using different technologies and components. It has been mainly designed to alert the drivers and safeguard their lives.

The main purpose of this paper is to avoid accidents and to alert the drivers about the speed limits for safe traveling. In order to avoid accidents, instead of controlling the vehicle speed automatically, this project will be helpful in alerting the driver about the speed limits and detecting accidents. When they enter into the speed limit areas, using GSM technology if the driver neglects the speed limit in that particular area, the details of the area and vehicle will be sent through message or email or phone call to the traffic police system and the drivers to implement the challan.

Acknowledgement

The authors would like to thanks Dr. Kshitij Singhal, the H.O.D. of Electronics and Communication Engineering, Moradabad institute of technology, Moradabad and all the faculty members who guide us. Special thanks to the authors that refers for their papers.

References

[1]. Sairaj Bhatkar, Mayuresh Shivalkar, Bhushan Tandale, Prof. P.S. Joshi."Survey of Various Methods used for Speed Calculation of a Vehicle" International Journal on Recent and Innovation Trends in Computing and Communication, Vol. 1 Issue 3, March 2015
[2]. Mayuri Konde, Manasi Chaudhari, Vikas Yadav," Real Time Motion Detection Using Dynamic Camera". International Journal of Computer Applications, Volume 114-No. 7, March 2013.
[3]. Akshada Deshmukh, Harshalata Wadaskar, Leena Zade, Neha Dhakate, Preetee Karmore."Webcam Based Intelligent Surveillance System". International Journal of Engineering and Science, Vol.2, Issue 8 (March 2013)
[4]. Manisha Rathore and Saroj Kumari."Tracking Number Plate from Vehicle using MATLAB". International Journal in Foundations of Computer Science & Technology (IJFCST), Vol.4, No.3, May 2014
[5]. R. Thomas. Less "Intelligent speed adaptation for road vehicles". IEEE Review, 49(5):40–43, May 2003.
[6]. Singh, K., Chawla, R. and Singh, H. 2014. Intelligent Speed Violation Detection System. International Journal of Engineering and Technical Research, (Jan. 2014), Vol. 2, No. 1.
[7]. Yao Jin. The discussion of Road Traffic Safety Countermeasures System[J]. Private Science and Technology, 2010.
[8]. Ma Chao. Embedded GSM message interface hardware and software design [J]. Microcontroller and Embedded Systems, 2003.
[9]. S.Misra, M. Reisslein, and G. Xue, ―A survey of multimedia streaming in wireless sensor networks, vol. 10, no. 4, pp. 18–39, 2008.
[10]. Bramberger, Pflugfelder, Maier, Rinner, Strobl, Schwabach, A Smart Camera for Traffic Surveillance (2000).
[11]. J.S. Chittode and R. Kate, "Number plate recognition using segmentation," International Journal of Engineering Research & Technology, Vol. 1 Issue 9, November- 2012.
[12]. D. Sawicki, Traffic Radar Handbook: "A Comprehensive Guide to Speed Measuring Systems", Author House, 2002.
[13]. J.S. Chittode and R. Kate, "Number plate recognition using segmentation," International Journal of Engineering Research & Technology, Vol. 1 Issue 9, November- 2012.
[14]. H. Peng, F. Long and Z. Chi, "Document image recognition based on template matching of component block projections," IEEE transaction on Pattern Analysis and machine Intelligence, Vol.25, no. 9, pp 1188-1192, sep 2003.
[15]. C. Chunyu, W. Fucheng, C. Baozhi and Z. Chen," Application of image processing to the vehicle license plate recognition," International Conference on Computer Science and Electronics Engineering, published by Allantis press, pp 2867-2869, 2013.
[16]. G. C.Lekhana and R.Srikantaswamy," Real time license plate recognition system," International Journal of Advanced Technology & Engineering Research, Vol-2, Issue-4, pp 5-9, July 2012.
[17]. C N Paunwala and S Patnaik, "A novel multiple license plate extraction technique for complex background in Indian traffic conditions," International Journal of Image processing, Vol-4,Issue-2,pp106-118.

Author's Biography

Apoorv Saxena, Student of Electronics and Communication Engineering, Moradabad Institute of Technology, Moradabad, Uttar Pradesh (244001), and Area of interest includes Communications.

Suchita Saxena, received the B.Tech degree in electronics and communication engineering from M.I.T. Moradabad and completed M.Tech in Microwave from Uttar Pradesh Technical University, Lucknow. Her main research interest is in analysis of microstrip antennas

Alpna Saxena, Student of Electronics and Communication Engineering, Moradabad Institute of Technology, Moradabad, Uttar Pradesh (244001), and Area of interest includes Embedded Systems.

Akash Saxena, Student of Electronics and Communication Engineering, Moradabad Institute of Technology, Moradabad, Uttar Pradesh (244001), and Area of interest includes MATLAB and Embedded System.

Dev Khanna, Student of Electronics and Communication Engineering, Moradabad Institute of Technology, Moradabad, Uttar Pradesh (244001), and Area of interest includes Embedded System and Digital Circuits.